THIRD ANGLE PROJECTION

REMOVE ALL BURRS AND SHARP EDGES
DO NOT SCALE
IF IN DOUBT – ASK

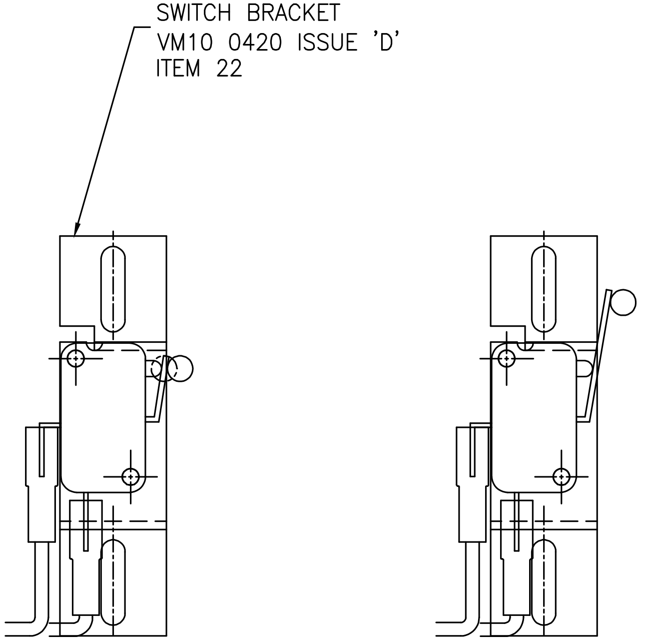

SWITCHES MUST BE ASSEMBLED
TO BRACKET AS SHOWN
THIS IS SAFETY CRITICAL

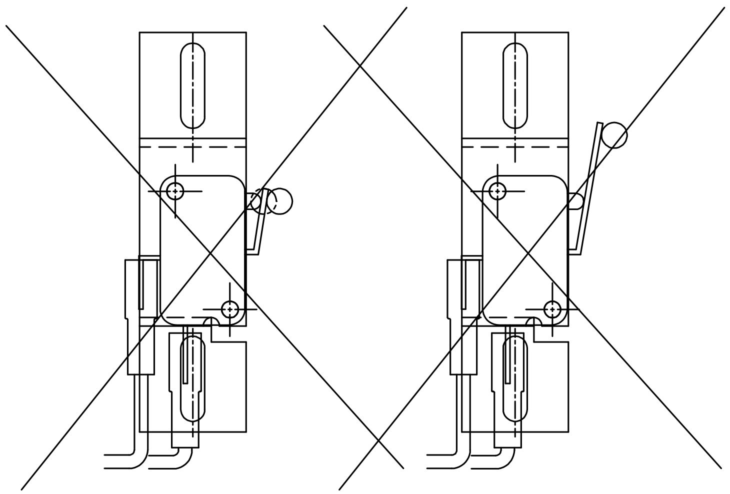

ISS	ALTERATION	INTLS & DATE
E	REFER TO SHEET 2 ECO 0819	WP 24.8.01

WESSEX MEDICAL EQUIP. CO. LTD
BUDDS LANE , ROMSEY,
HAMPSHIRE. SO51 0HA

© THIS DRAWING IS THE PROPERTY OF WESSEX MEDICAL EQUIP. CO. LTD. AND MAY NOT BE PUBLISHED, REPRODUCED OR USED FOR MANUFACTURE WITHOUT THE EXPRESS PERMISSION OF THE OWNERS IN WRITING

SCALE 1:1 @ A3		ALL DIMENSIONS IN mm UNLESS OTHERWISE STATED AND DRAWN TO BS 308			
DRN WP	DATE 19.10.99	TOLERANCES: UNLESS OTHERWISE STATED			ANGULAR ±0.5°
CHKD	DATE	X	X.X	X.XX	THREAD ISO COARSE CLASS 6
APPD	DATE	±1.0	±0.25	±0.13	

MATERIAL: N/A
B.S. SPEC: N/A
FINISH: N/A

DESCRIPTION
BRACKET SWITCH ASSY

DRAWING No.
VM00 2080
SHEET 2 OF 2 SHTS

THIRD ANGLE PROJECTION

REMOVE ALL BURRS AND SHARP EDGES
DO NOT SCALE
IF IN DOUBT – ASK

ITEM	PART No.	DESCRIPTION	QTY
1	VM10 0744	GUSSET TRAP BOARD LH	1
2	VM10 0743	GUSSET TRAP BOARD RH	1
3	VM10 0749	TRAP BOARD OPERATING ARM	2
4	VM10 0750	PIN TRAP BOARD	4
5	MC00 0017	BEARING 0/D32xI/D12x10	8
6	FF60 8140	M12 DOME CAP S/LOCK WASHER	8
7	FF61 0015	WASHER M12x1thk	16
8	FF30 1013	SCREW M6 X 40 HEX HD	4
9	FF60 1110	WASHER M6 PLAIN FORM 'B'	8
10	FF70 3100	NUT M6 NYLOC	4
11	FF30 1214	SCREW M8 X 45 SET HEX HD	2
12	FF70 1120	NUT M8 LOCK HEX	2
13	FF18 0909	SCREW M5 X 20 POZI PAN HD	4
14	FF60 4090	WASHER M5 SPRING	4
15	FF60 0090	WASHER M5 PLAIN	4
16	FF01 0807	No 8 X 1/2 POZI PAN SCREW	6
17	FF63 0602	SCREW ø5 X 20 POZI CSK WOOD	7
18	VM10 0747	COVER TRAP BOARD	2
19	VM30 0725	RETAINER TRAP BOARD	2
20	EC08 4503	MAGNET TRAPBOARD PROXIMITY	1

MODEL	PART No
VM30/50	VM30 0070
VM31/51	VM31 0070
VM36/56	VM36 0070

NOTE: IT IS IMPORTANT TO FIT M6x40 HEX HD SCREWS ROUND THE CORRECT WAY. (NUTS MUST FACE INSIDE THE LIFT)

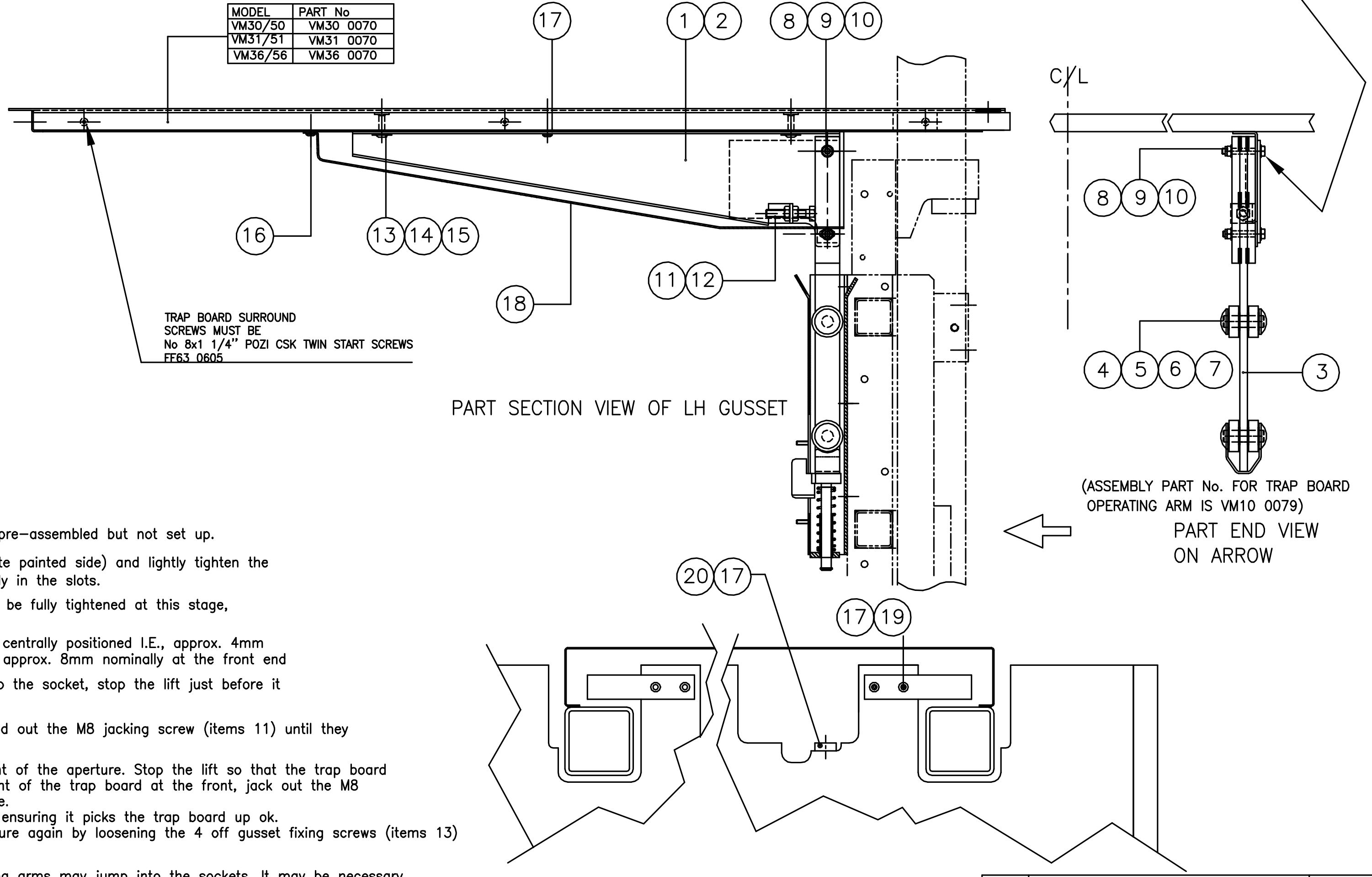

TRAP BOARD SETTING INSTRUCTIONS.

1. The gussets & operating arms (items 1–12) are factory pre–assembled but not set up.
2. Fix the gusset assemblies to the underside of board (white painted side) and lightly tighten the fixing screws (item 13) allowing the gussets to slide freely in the slots.
3. The operating arm fixing screws (items 8&10) should not be fully tightened at this stage, they must be able to pivot freely.
4. Locate the trap board into the aperture and ensure it is centrally positioned I.E., approx. 4mm clearance between the board and the trim each side and approx. 8mm nominally at the front end
5. Slowly raise the lift ensuring the operating arms align into the socket, stop the lift just before it lifts the trap board up.
6. Tighten the main gusset fixing screws (items 13) and wind out the M8 jacking screw (items 11) until they touch the operating arms.
7. Raise the lift carefully ensuring it doesn't jam in the front of the aperture. Stop the lift so that the trap board is level with the top of the aperture. Supporting the weight of the trap board at the front, jack out the M8 jacking screws until the board is parallel with the aperture.
   Lower the lift to the ground floor and then raise the lift ensuring it picks the trap board up ok.
   It may be necessary to align the trap board in the aperture again by loosening the 4 off gusset fixing screws (items 13) and repositioning the trap board.
8. If the operating arms are jacked out too far the operating arms may jump into the sockets. It may be necessary to back off the jacking screws (items 11) slightly to ensure a smooth pickup.
9. When satisfied that the trap board can be repeatedly picked up and lowered into the aperture correctly tighten all fixings and finally secure each gusset with a 3rd screw (item 16) and tighten up the lock nuts (items 12).
10. Check the operating arms are hanging down vertically. It may be necessary to push or pull the arms left or right so that they are parallel with the tracks.
11. See sheet 2 for setting the trap board switches.
12. When the trap board is set up the trap board retainers (item 19) must be fitted in the two positions. See diagram above.

ISS	ALTERATION	INTLS & DATE
H	TRAPBOARD SECURING SCREW CHANGED ECO 0913	WP 13.2.03
G	TRAP BOARD RETAINER CHANGED ECO 0860	WP 3.5.02

WESSEX MEDICAL EQUIP. CO. LTD
BUDDS LANE , ROMSEY,
HAMPSHIRE. SO51 0HA

© THIS DRAWING IS THE PROPERTY OF WESSEX MEDICAL EQUIP. CO. LTD. AND MAY NOT BE PUBLISHED, REPRODUCED OR USED FOR MANUFACTURE WITHOUT THE EXPRESS PERMISSION OF THE OWNERS IN WRITING

SCALE 1 : 5 @ A3		ALL DIMENSIONS IN mm UNLESS OTHERWISE STATED AND DRAWN TO BS 308			
DRN EAS	DATE 17.10.98	TOLERANCES: UNLESS OTHERWISE STATED			ANGULAR ±0.5°
CHKD	DATE	X	X.X	X.XX	THREAD ISO COARSE CLASS 6
APPD	DATE	±1.0	±0.25	±0.13	

MATERIAL N/A
B.S. SPEC: N/A
FINISH: N/A

DESCRIPTION
TRAP BOARD
(PICK UP ASSEMBLY)
SETTING INSTRUCTION

DRAWING No.
VM00 2090
SHEET 1 OF 2 SHTS

1	2	3	4	5	6	7	8

THIRD ANGLE PROJECTION

REMOVE ALL BURRS AND SHARP EDGES
DO NOT SCALE
IF IN DOUBT – ASK

ITEM	PART No.	DESCRIPTION	QTY
20	VM30 0218	SOCKET SUPPORT TRAPBOARD	2
21	VM30 0219	PLATE TRAPBOARD	2
22	VM30 0220	PLUNGER TRAPBOARD	2
23	MC04 1035	SPRING COMPRESSION	2
24	FF60 1140	M12 FORM 'B' PLAIN WASHER	SEE TABLE
25	VM10 0420	PLATE SWITCH	4
26	FF60 0070	WASHER M4 PLAIN	8
27	FF70 2070	NUT M4 HEX HD NYLOC	8
28	EC08 1502	SWITCH MICRO	4
29	FF18 0508	SCREW M3 X 16 POZI PAN HD	8
30			
31	FF70 2050	NUT M3 HEX HD NYLOC	8
32	FF84 0010	CIRCLIP 10 DIA EXTERNAL	2
33	FF18 0908	SCREW M5 X 16 POZI PAN HD	12
34	FF60 0090	WASHER M5 PLAIN	12

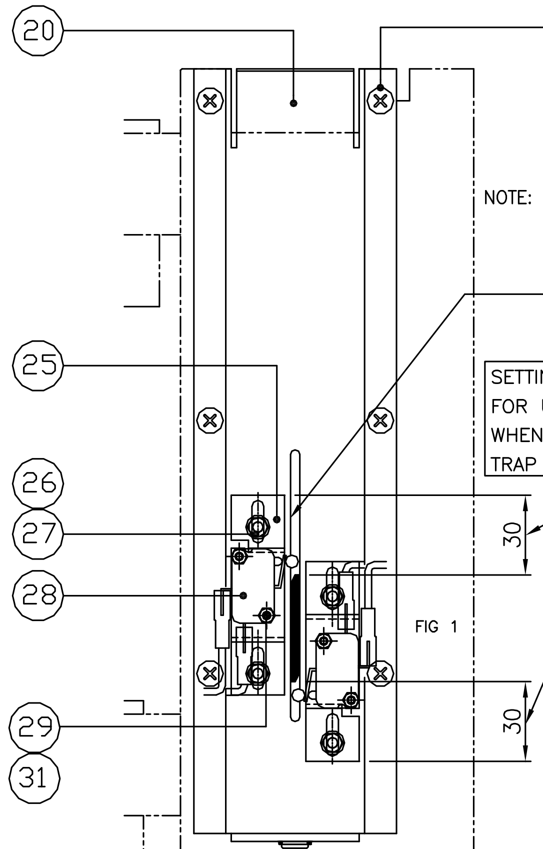

NOTE: ENSURE THE SLOT IN THE SWITCH PLATE IS CENTRAL TO THE STUDS ON THE SOCKET & THE SWITCH PLATE DOES NOT OVERHANG THE SLOT.

SETTING DIMENSION
FOR UP & DOWN SWITCHES
WHEN SUPPORTING THE
TRAP BOARD

FIG 1

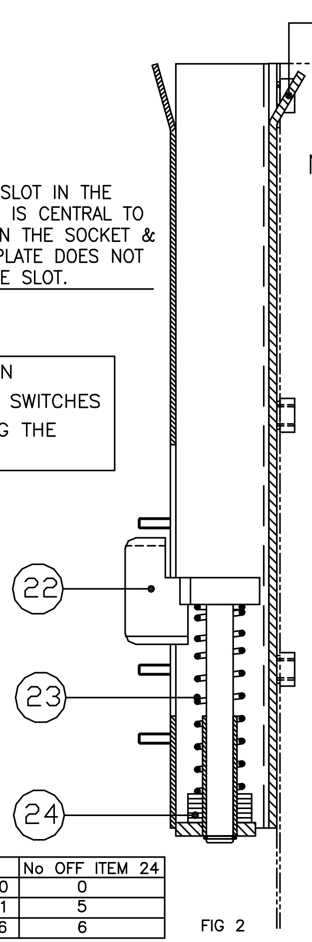

FIG 2

NOTE: PLUNGER,TUBE & FACES OF TRAP BOARD SOCKET MUST BE FULLY GREASED.

CONTINUED FROM SHEET 1

TRAP BOARD SWITCH SETTING

1. The socket & switch items 20–34 are factory assembled but not set up.

2. Raise the lift to pick up the trap board assy and stop the lift so that the trap board is approximately 200mm clear of the aperture.

   Adjust the micro–switch plates (item 25) until the 30mm setting dimension is achieved. (see fig 1)

3. Check that the trap board operates correctly by sending the lift up & down and press the trap board up & down on all four corners, and the mid point along each edge and at the board centre In all cases the lift should stop.

5. If a carpet is fitted after the initial setting, the switches may require further adjustment and extra washers to be added.

MODEL	No OFF ITEM 24
VM30/50	0
VM31/51	5
VM36/56	6

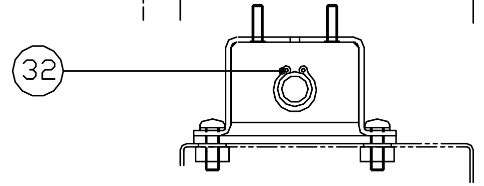

FIG 3

NOTE: IF ITEMS 22 (PLUNGERS) ARE SITTING TOO LOW i.e. BOTTOMING OUT IN SLOT BEFORE ACTUATING THE SWITCH THEN EXTRA WASHERS WILL NEED ADDING. ALWAYS KEEP THE SAME AMOUNT OF WASHERS IN BOTH SOCKETS.

(EXTRA WASHERS MAY NEED TO BE ADDED IF HEAVY CARPETS ARE FITTED.)

ISS	ALTERATION	INTLS & DATE
H	REFER TO SHEET 1 ECO No 0913	WP 13.2.03
G	REFER TO SHEET 1 ECO No 0860	WP 3.5.02
F	SWITCH PLATE & FIXINGS CHANGED ECO No 0773	WP 24.1.00

Wessex ©
WESSEX MEDICAL EQUIP. CO. LTD
BUDDS LANE , ROMSEY,
HAMPSHIRE. SO51 0HA

THIS DRAWING IS THE PROPERTY OF WESSEX MEDICAL EQUIP. CO. LTD. AND MAY NOT BE PUBLISHED, REPRODUCED OR USED FOR MANUFACTURE WITHOUT THE EXPRESS PERMISSION OF THE OWNERS IN WRITING

SCALE 1:2 @ A3
DRN EAS | DATE 16.10.98
CHKD | DATE
APPD | DATE

ALL DIMENSIONS IN mm UNLESS OTHERWISE STATED AND DRAWN TO BS 308

TOLERANCES: UNLESS OTHERWISE STATED			ANGULAR ±0.5°
X	X.X	X.XX	THREAD ISO COARSE CLASS 6
±1.0	±0.25	±0.13	

MATERIAL N/A
B.S. SPEC: N/A
FINISH: N/A

DESCRIPTION
TRAP BOARD
(SWITCH ASSEMBLY)
SETTING INSTRUCTION

DRAWING No.
VM00 2090

SHEET 2 OF 2 SHTS

THIRD ANGLE PROJECTION

REMOVE ALL BURRS AND SHARP EDGES
DO NOT SCALE
IF IN DOUBT – ASK

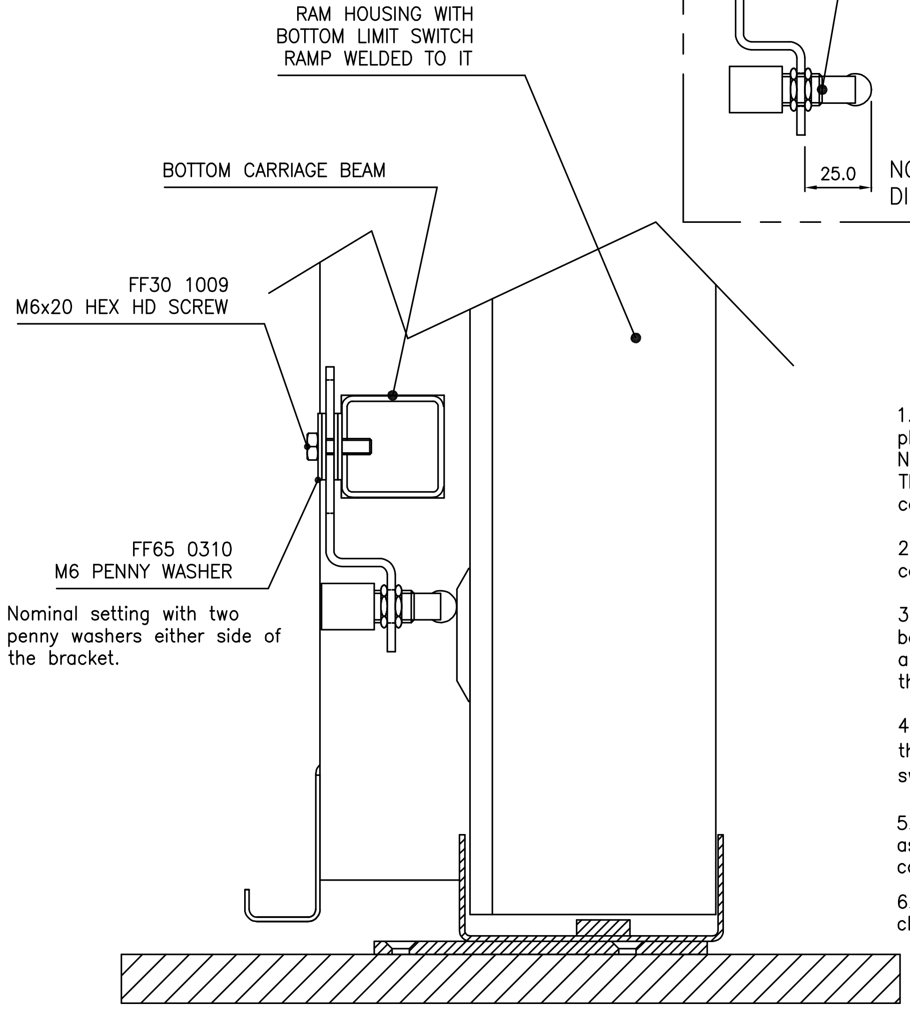

Nominal setting with two penny washers either side of the bracket.

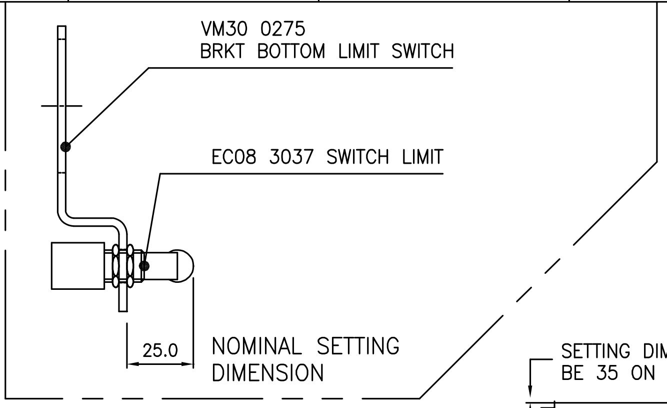

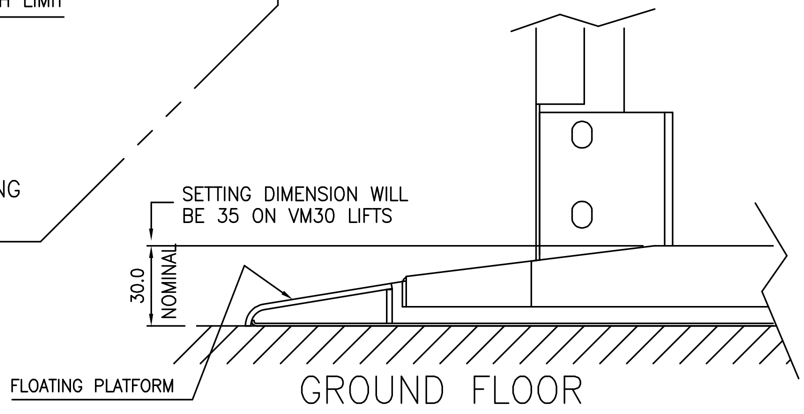

1. The bottom limit switch should be set by sending the lift down and letting it stop on the floating platform switches.
Now adjust the bottom limit switch so that it is on the flat part of the ramp by approximately 5mm.
The bottom limit switch should not be operated before the floating platform starts to touch the carpet, but it must be activated before the down circuit floating platform switches operate.

2. When the bottom limit switch is operated by the ramp fitted on the ram housing, the lift will continue down a predetermined time so the lift will sit into the floating platform.

3. The limit switch bracket can be adjusted up or down by loosening the M6 hex hd screws on the bottom carriage beam. The limit switch can be adjusted in or out by removing the M6 hex hd screws and placing the penny washers either side of the limit switch bracket. If further adjustment is required the switch can be adjusted in or out by loosening the switches fixing nuts and adjusting accordingly.

4. The limit switch should be set so there is a 2mm running clearance from the ram housing, for the full travel of the lift. (This gap must be checked when the lift is serviced to ensure the limit switch isn't operated prematurely due to slider pad wear).

5. The down limit should be set so that the lift floor is 30mm (VM30 35mm) above the ground floor as shown in the diagram above. The setting dimension may vary due to floor run out, in these cases the lift should be set as low as possible.

6. When the lift is on it's down limit you should be able to move the floating platform, if it is clamped to the floor by the weight of the lift, the down limit will need adjusting.

ISS	ALTERATION	INTLS & DATE
C	BOTTOM LIMIT SWITCH CHANGED ECO 1044	W.P 24.11.04

Wessex ©
WESSEX MEDICAL EQUIP. CO. LTD
BUDDS LANE, ROMSEY,
HAMPSHIRE. SO51 0HA

THIS DRAWING IS THE PROPERTY OF WESSEX MEDICAL EQUIP. CO. LTD. AND MAY NOT BE PUBLISHED, REPRODUCED OR USED FOR MANUFACTURE WITHOUT THE EXPRESS PERMISSION OF THE OWNERS IN WRITING

SCALE 1:2 @ A3		ALL DIMENSIONS IN mm UNLESS OTHERWISE STATED AND DRAWN TO BS 308			
DRN W.P	DATE 19.10.98	TOLERANCES: UNLESS OTHERWISE STATED			ANGULAR ±0.5°
CHKD	DATE	X	X.X	X.XX	THREAD ISO COARSE CLASS 6
APPD	DATE	±1.0	±0.25	±0.13	

MATERIAL: N/A
B.S. SPEC: N/A
FINISH: N/A

DESCRIPTION
BOTTOM LIMIT SWITCH
SETTING INSTRUCTIONS

DRAWING No.
VM00 2100
SHEET 1 OF 1 SHTS

THIRD ANGLE PROJECTION

REMOVE ALL BURRS AND SHARP EDGES
DO NOT SCALE
IF IN DOUBT – ASK

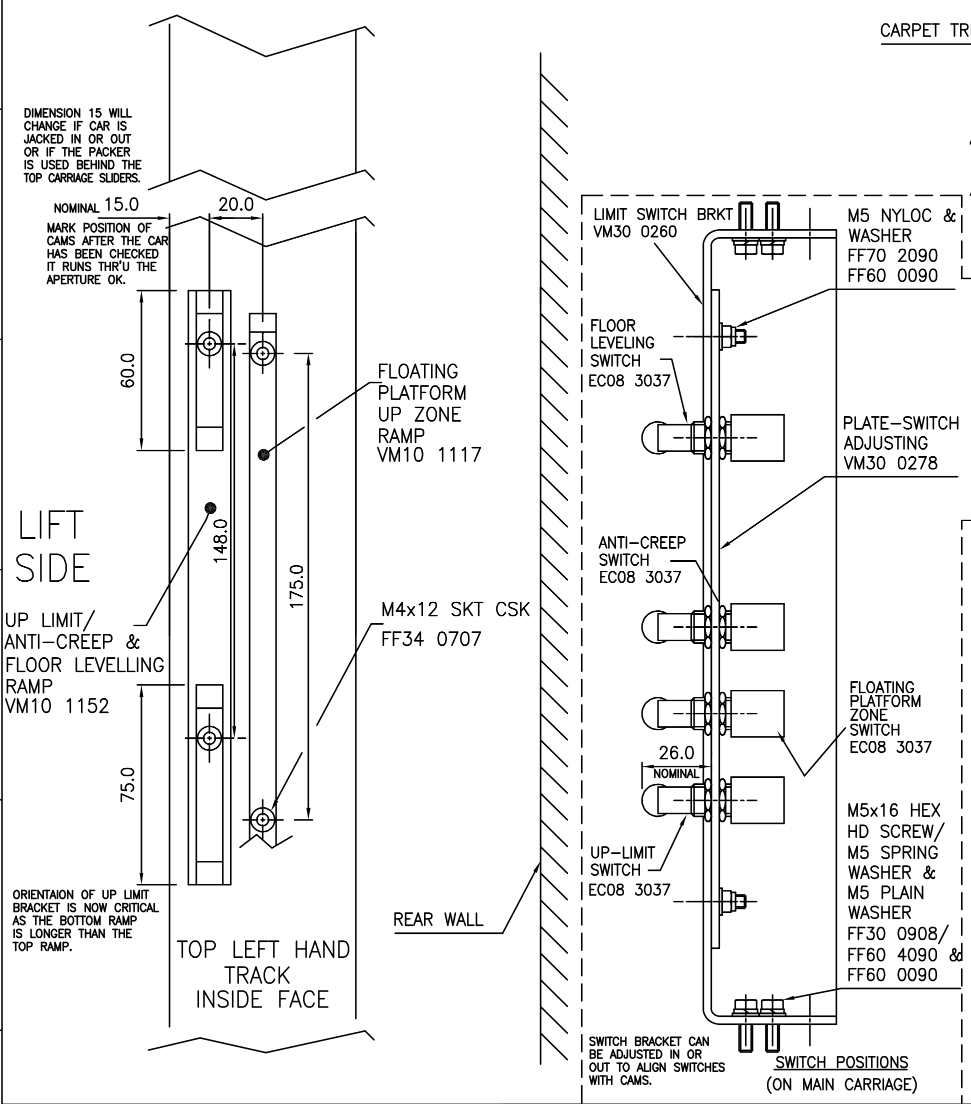

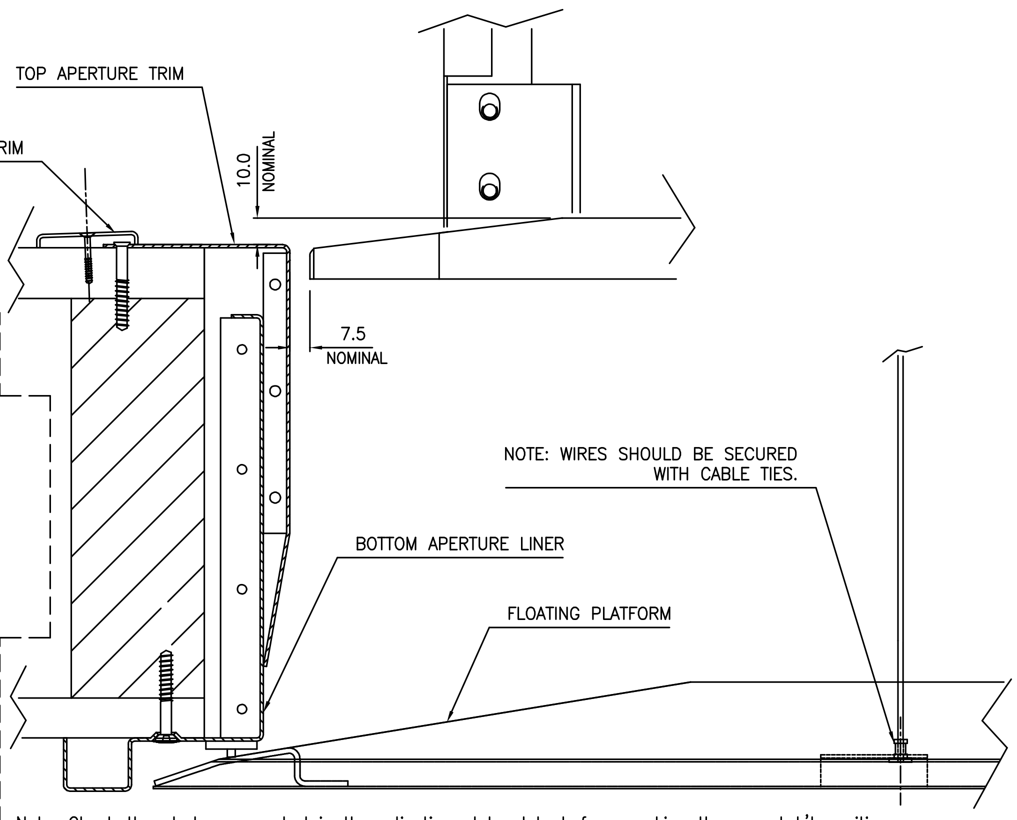

Note: Check the studs are central in the adjusting plate slots before marking the cam brk't position.

1. Up Limit Ramp Setting.:– Set the lift so that the floor of the lift is 10mm above the top aperture trim as shown in the diagram above. Switch the power off to the lift and disconnect the batteries. Position the top limit ramp just above the up limit switch and slide it down the track until it just operates the up limit switch. Mark this position and then lower the ramp bracket 10mm and fix it in position. Reconnect the power supply and batteries and check the lift stops in the correct position.
   The switches are now mounted to an adjusting plate at fixed pitches. To fine adjust the up limit undo the M5 nylocs and the adjusting plate can be moved up or down. The anti–creep & floor leveling switch are in a fixed preset position.
2. The floating platform up zone ramp should be positioned so that the floating platform is zoned out 10mm before it enters the bottom aperture liner.
3. The final limit switch is fixed to the PSU enclosure. It is operated by a bracket fitted to the carriage frame. It must be checked that it operates correctly. It should be operated between 20–25mm of lift overtravel. (i.e. dimension from top aperture trim to lift floor =40–45mm.)

The user must be made aware that the lift may level itself when they step into the car first thing in the morning.

NOTE: Up limit bracket orientation is critical now.

ISS	ALTERATION	INTLS & DATE
J	LIMIT SWITCHES CHANGED ECO 1044	W.P 24.11.04

Wessex ©
WESSEX MEDICAL EQUIP. CO. LTD
BUDDS LANE , ROMSEY,
HAMPSHIRE. S051 0HA

THIS DRAWING IS THE PROPERTY OF WESSEX MEDICAL EQUIP. CO. LTD. AND MAY NOT BE PUBLISHED, REPRODUCED OR USED FOR MANUFACTURE WITHOUT THE EXPRESS PERMISSION OF THE OWNERS IN WRITING

SCALE 1:2 @ A3		ALL DIMENSIONS IN mm UNLESS OTHERWISE STATED AND DRAWN TO BS 308				MATERIAL: N/A B.S. SPEC: N/A
DRN W.P	DATE 20.10.98	TOLERANCES: UNLESS OTHERWISE STATED			ANGULAR ±0.5°	
CHKD	DATE	X	X.X	X.XX	THREAD ISO COARSE CLASS 6	
APPD	DATE	±1.0	±0.25	±0.13		FINISH: N/A

DESCRIPTION
TOP LIMIT SWITCH
SETTING INSTRUCTIONS

DRAWING No.
VM00 2110

SHEET 1 OF 1 SHTS

THIRD ANGLE PROJECTION

REMOVE ALL BURRS AND SHARP EDGES
DO NOT SCALE
IF IN DOUBT – ASK

NOTE: There is now an extra safety circuit incorporated on the PCB which prevents the lift from working if the door latch arm jams down. It will only reset when the door latch arm is functioning correctly. LED 25 = Interlock fail indicator.

SECTIONAL VIEW OF DOOR & SIDE PANEL

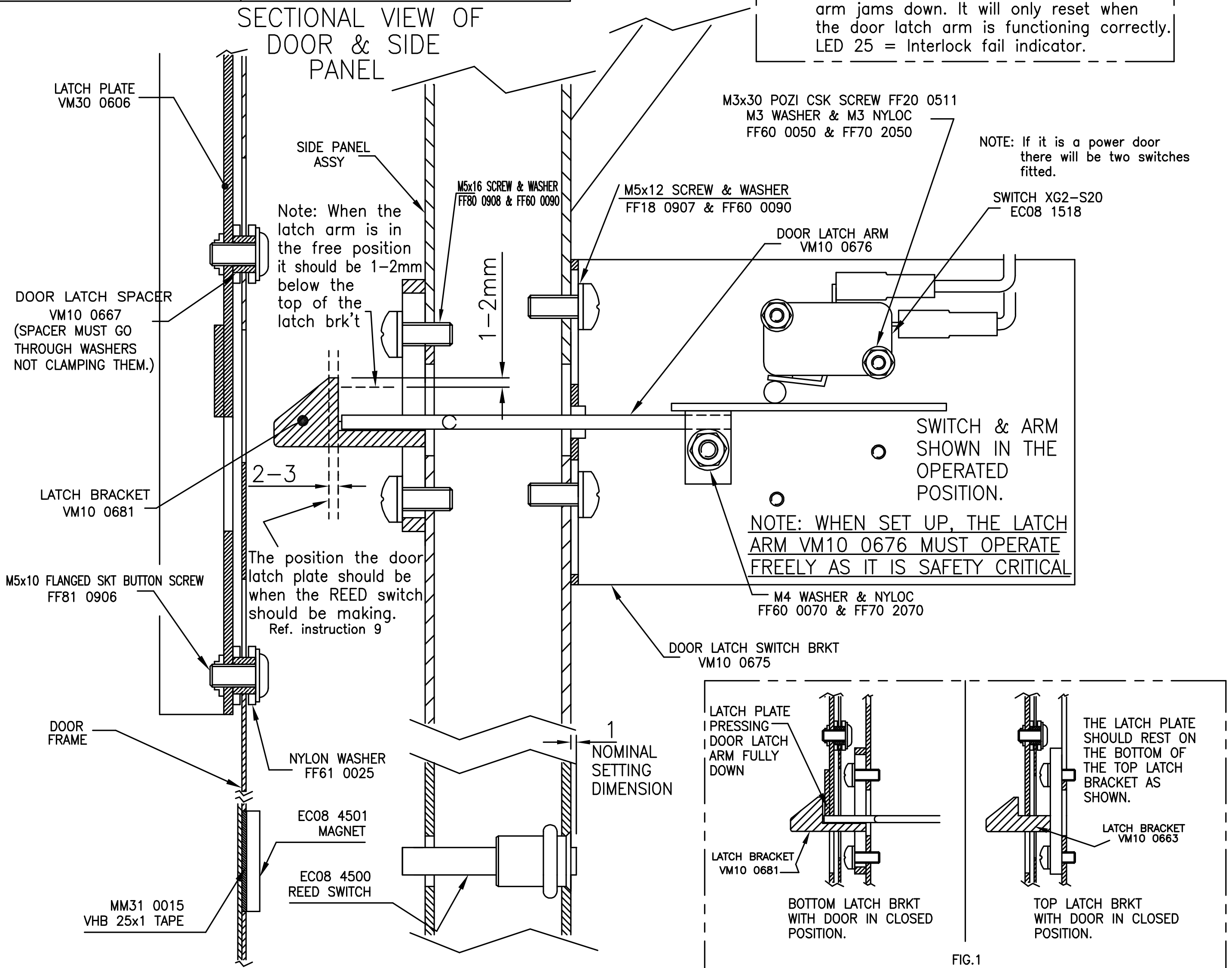

FIG.1

1. Before the door can be set up the side panels must be tensioned. Refer to setting instruction VM00 2040.
2. With the lift at ground floor and the latch brackets VM10 0663 & VM10 0681 loosely screwed in place, close the door upto the latch brkts.
3. Move the latch brackets to a position where the beginning of the slope on the latch brackets are just below the cutout on the latch plate & tighten the screws. (Applies to both top & bottom latch brackets)
4. Send the lift to the first floor position & check the door opens & closes correctly. If the latch plate hits the latch bracket below the beginning of the slope, lower the latch bracket down until the start of the slope is just below the cutout on the latch plate.
5. The latch plate should make contact with both top & bottom latch brackets at the same time.
6. Send the lift to the ground floor and recheck the door opens and closes correctly. Note: It does not matter if the latch plate hits the latch bracket higher up the slope when the lift is at the first floor position or vice versa, just as long as the door latch plate depresses the door latch arm VM10 0676 fully down on the latch bracket when the door is closed. (AS SHOWN)
7. The door latch arm should be set up as shown in the diagram. The latch arm should operate the switch within 2–3mm of downward movement and still end up fully bottomed out on the latch bracket.

Note: it is important to set the door latch arm 1–2mm below the top of the latch bracket. This is achieved by adjusting the door latch switch bracket up or down. THIS IS SAFETY CRITICAL.

Note: The latch arm should always be fully bottomed out on the latch bracket over the entire travel of the lift.

8. Check that the door latches are fairly central to the door latch plate (width ways). This can be adjusted by moving the door hinges in the slots, also check the side panels are jacked out square.
9. The REED switch should be set up so that it makes the circuit 2–3 mm's before the latch plate drops into position onto the door latch arm, as shown. After positioning, the reed switch should then be held in position using adhesive tape.
10. Take the lift up & down the full travel 3 or 4 times, shaking the door to make sure the reed switch is not set too sensitive.
11. Ensure the door safety edge is fitted and working before testing the door interlock switches.
12. Check the interlock switches with the lift at the lower level.
13. With the door open press the door latch arm down and press the up button, the lift should NOT move.
14. With the door open fit a magnet to the side panel where the reed switch is fitted. LED 5 should not illuminate. Press the up button, the lift should NOT move.

ISS	ALTERATION	INTLS & DATE
I	M8 CLUFIX REPLACES TAPPED M8 HOLE M8 NYLON NUT REMOVED. ECO 0954	DSM 25.2.04

Wessex ©

WESSEX MEDICAL EQUIP. CO. LTD
BUDDS LANE , ROMSEY,
HAMPSHIRE. S051 0HA

THIS DRAWING IS THE PROPERTY OF WESSEX MEDICAL EQUIP. CO. LTD. AND MAY NOT BE PUBLISHED, REPRODUCED OR USED FOR MANUFACTURE WITHOUT THE EXPRESS PERMISSION OF THE OWNERS IN WRITING

SCALE 1:1 @ A3	
DRN W.P	DATE 20.10.98
CHKD	DATE
APPD	DATE

ALL DIMENSIONS IN mm UNLESS OTHERWISE STATED AND DRAWN TO BS 308

TOLERANCES: UNLESS OTHERWISE STATED			ANGULAR ±0.5°
X	X.X	X.XX	THREAD ISO COARSE CLASS 6
±1.0	±0.25	±0.13	

MATERIAL: N/A
B.S. SPEC: N/A
FINISH: N/A

DESCRIPTION
DOOR LATCH & SWITCH SETTING INSTRUCTION

DRAWING No.
VM00 2120

SHEET 1 OF 1 SHTS

THIRD ANGLE PROJECTION

REMOVE ALL BURRS AND SHARP EDGES
DO NOT SCALE
IF IN DOUBT – ASK

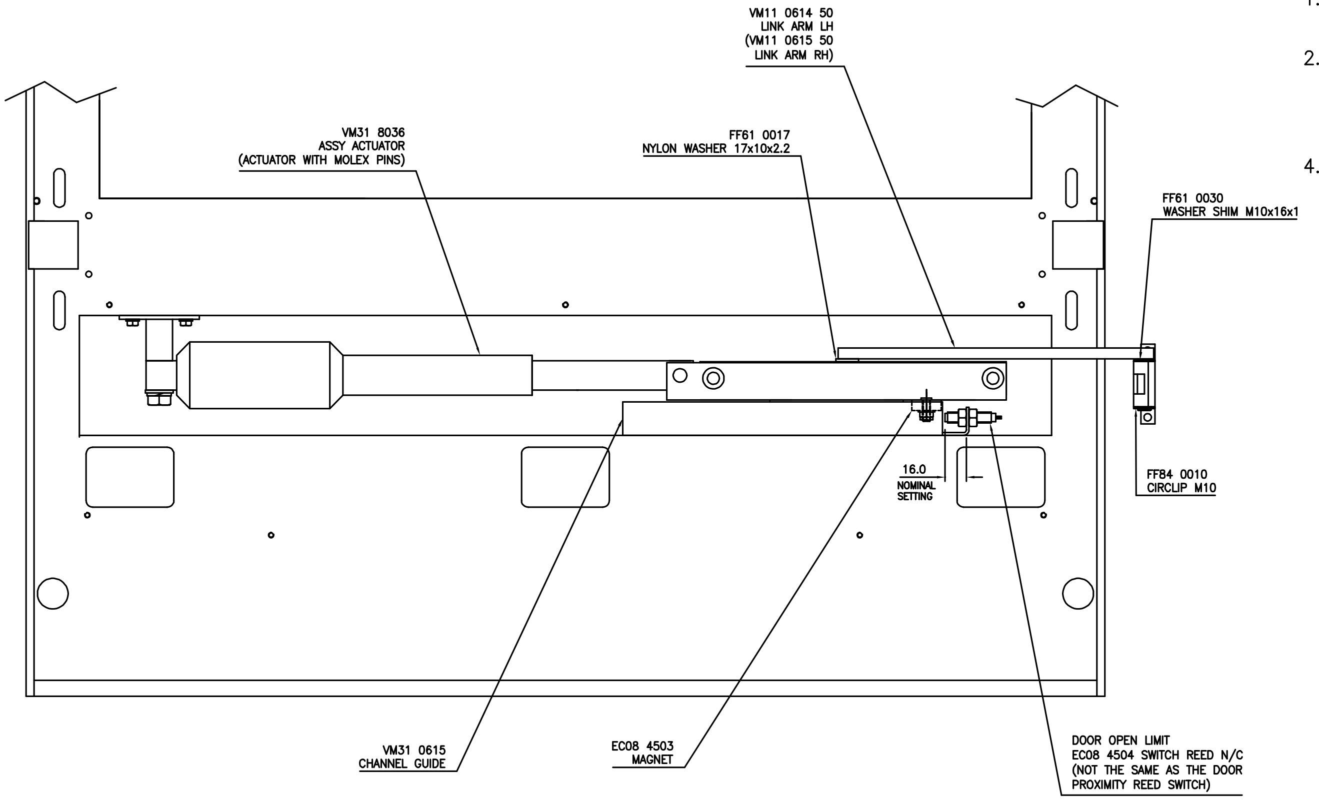

NOTE: Before manually overriding the door, check the orientation of the chamfers on the breakout plates (VM11 0609) see sheet 2.

1. The close limit is fitted onto the latch bracket (on the side panel) and is operated by the latch plate when the door closes.

2. The open limit is adjustable and should be set so that the door opens to 90°. The door can be set to open past 90° or under 90° if required. This is achieved by adjusting the reed switch in or out as required.

4. The actuator is now protected by a timer, so that if the limit switches aren't made within 10 seconds the power is cut off to the actuator. Pressing the button will restart the actuator.

POINTS TO CHECK IF THE DOOR IS NOT FUNCTIONING CORRECTLY.

A. Check the door latches and latch interlock switch are set correctly refer to VM00 2120.

B. Check the door is free moving on the hinges and is fitted square to the lift.

C. Check the nylatron block slides up & down in the guide channel, with the actuator disconnected. There should be some resistance but not enough to stop it being moved by hand.

D. Check the latch plate in the door is sliding up & down freely.

E. Check that the door is not badly distorted.

F. Check that the lift side panels are jacked out correctly giving the correct width refer to VM00 2040.

G. Check the door is aligned square with the lift.

H. Check the bottom slider pads are adjusted correctly and aren't distorting the lift car. Refer to VM00 2030.

i. Check the tracks are plumb.

J. Check the aperture is square and the lift car hasn't been distorted to compensate for this.
(measure across the aperture diagonally, the dimension should be the same across both diagonals).

K. Ensure the front angled face of the latch brackets are greased using EP2 Lithium Freedom grease Wessex part no CM31 5010.

ISS	ALTERATION	INTLS & DATE
D	VOLTAGE REGULATOR HAS REPLACED ADJUSTABLE RESISTOR & BOOST SWITCH ECO 1044	W.P 10.11.04

Wessex ©
WESSEX MEDICAL EQUIP. CO. LTD
BUDDS LANE , ROMSEY,
HAMPSHIRE. SO51 0HA

THIS DRAWING IS THE PROPERTY OF WESSEX MEDICAL EQUIP. CO. LTD. AND MAY NOT BE PUBLISHED, REPRODUCED OR USED FOR MANUFACTURE WITHOUT THE EXPRESS PERMISSION OF THE OWNERS IN WRITING

SCALE N.T.S		ALL DIMENSIONS IN mm UNLESS OTHERWISE STATED AND DRAWN TO BS 308		
DRN W.P	DATE 21.10.98	TOLERANCES: UNLESS OTHERWISE STATED		ANGULAR ±0.5°
CHKD	DATE	X: ±1.0	X.X: ±0.25	X.XX: ±0.13
APPD	DATE	THREAD ISO COARSE CLASS 6		

MATERIAL: N/A
B.S. SPEC: N/A
FINISH: N/A

DESCRIPTION
POWERED DOOR SETTING INSTRUCTION

DRAWING No.
VM00 2130
SHEET 1 OF 2 SHTS

THIRD ANGLE PROJECTION

REMOVE ALL BURRS AND SHARP EDGES
DO NOT SCALE
IF IN DOUBT – ASK

PLAN VIEW OF ACTUATOR ARRANGEMENT TO SHOW ORIENTATION OF BREAKOUT PLATES.

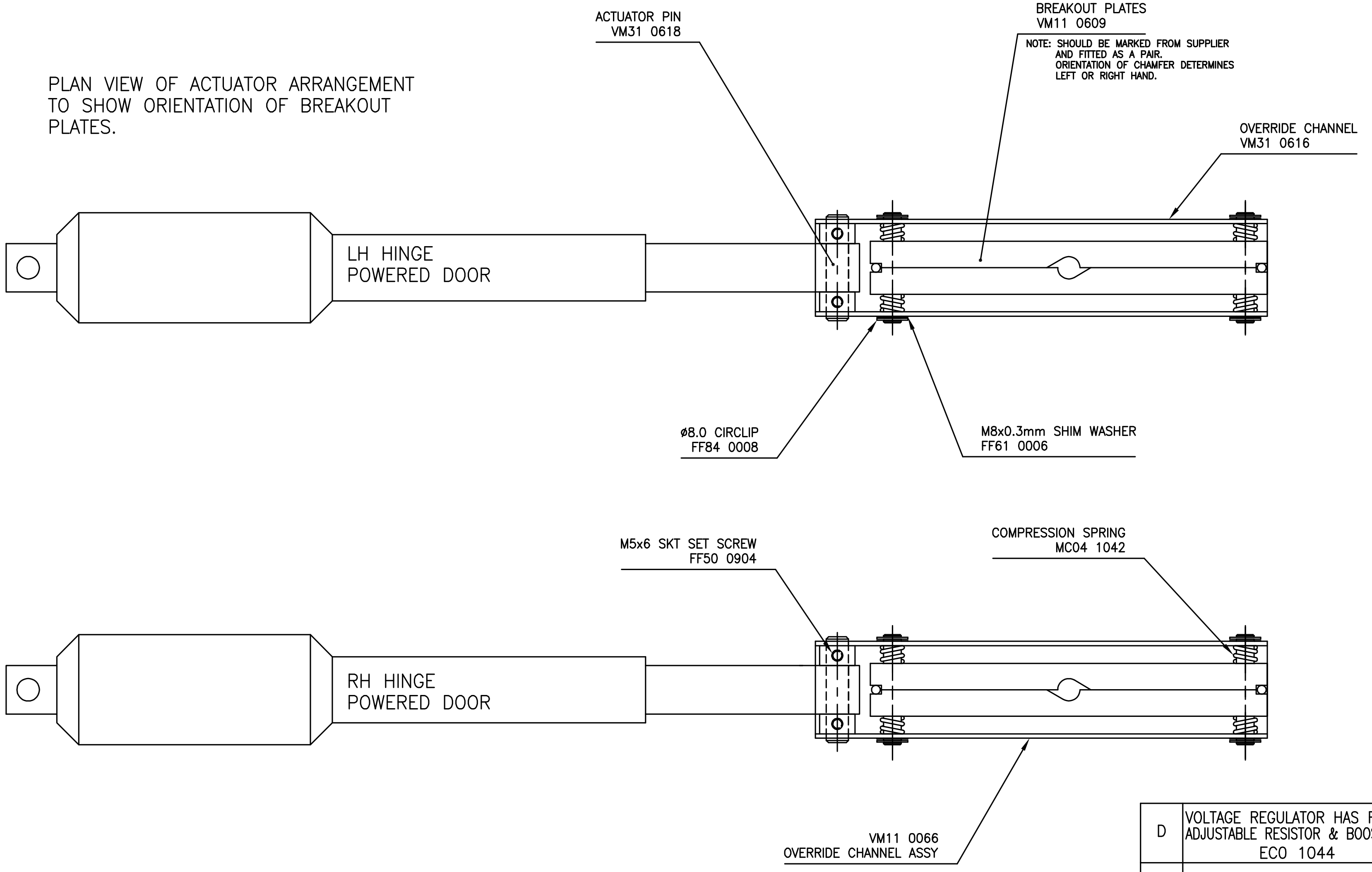

ISS	ALTERATION	INTLS & DATE
D	VOLTAGE REGULATOR HAS REPLACED ADJUSTABLE RESISTOR & BOOST SWITCH ECO 1044	W.P 10.11.04

Wessex ©
WESSEX MEDICAL EQUIP. CO. LTD
BUDDS LANE , ROMSEY,
HAMPSHIRE. SO51 0HA

THIS DRAWING IS THE PROPERTY OF WESSEX MEDICAL EQUIP. CO. LTD. AND MAY NOT BE PUBLISHED, REPRODUCED OR USED FOR MANUFACTURE WITHOUT THE EXPRESS PERMISSION OF THE OWNERS IN WRITING

SCALE 1:2 @ A3		ALL DIMENSIONS IN mm UNLESS OTHERWISE STATED AND DRAWN TO BS 308			
DRN W.P	DATE 22.10.98	TOLERANCES: UNLESS OTHERWISE STATED			ANGULAR ±0.5°
CHKD	DATE	X	X.X	X.XX	THREAD ISO COARSE CLASS 6
APPD	DATE	±1.0	±0.25	±0.13	

MATERIAL: N/A
B.S. SPEC: N/A
FINISH: N/A

DESCRIPTION
POWERED DOOR
SETTING INSTRUCTION

DRAWING No.
VM00 2130

SHEET 2 OF 2 SHTS

THIRD ANGLE PROJECTION

REMOVE ALL BURRS AND SHARP EDGES
DO NOT SCALE
IF IN DOUBT – ASK

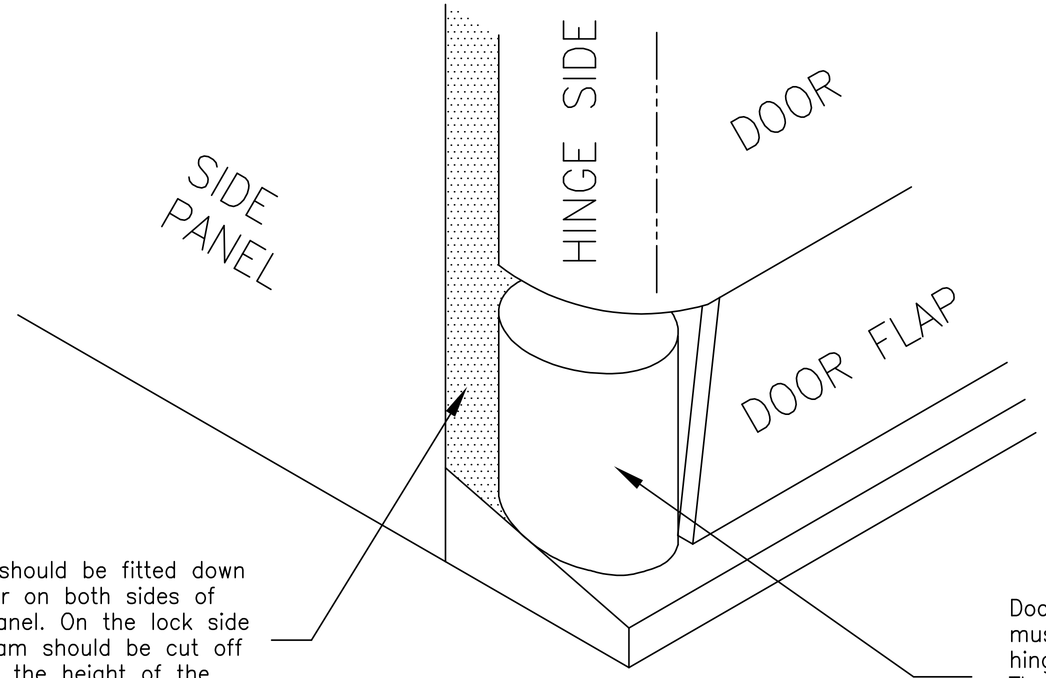

Foam should be fitted down to floor on both sides of side panel. On the lock side the foam should be cut off to suit the height of the square nylon block.

Door infill block VM10 0331 must only be fitted on the hinge side.
The carpet will need trimming on the hinge side to allow the door infill block to be fitted.

1. Check that the door flap does not foul on the door infill block when opening and closing the door. (manually open/close the door)

Points to check if the door flap is fouling on the door infill block..

(a) The door infill block can be rotated slightly to give more clearance.

(b) Check the door is positioned correctly on the side panel. (the hinge position can be moved left or right).

(c) If the flap is still fouling, the fixing hole in the floor can be slotted towards the back of the lift to allow the door infill to be moved back slightly.

ISS	ALTERATION	INTLS & DATE
A	PRODUCTION ISSUE ECO 0752	W.P 1.7.99

WESSEX MEDICAL EQUIP. CO. LTD
BUDDS LANE , ROMSEY,
HAMPSHIRE. SO51 0HA

© THIS DRAWING IS THE PROPERTY OF WESSEX MEDICAL EQUIP. CO. LTD. AND MAY NOT BE PUBLISHED, REPRODUCED OR USED FOR MANUFACTURE WITHOUT THE EXPRESS PERMISSION OF THE OWNERS IN WRITING

SCALE 1:1 @ A3

DRN W.P	DATE 1.7.99
CHKD	DATE
APPD	DATE

ALL DIMENSIONS IN mm UNLESS OTHERWISE STATED AND DRAWN TO BS 308

TOLERANCES: UNLESS OTHERWISE STATED			
X	X.X	X.XX	ANGULAR ±0.5°
±1.0	±0.25	±0.13	THREAD ISO COARSE CLASS 6

MATERIAL: N/A
B.S. SPEC: N/A
FINISH: N/A

DESCRIPTION
DOOR INFILL
SETTING INSTRUCTION

DRAWING No.
VM00 2140

SHEET 1 OF 1 SHTS

THIRD ANGLE PROJECTION

REMOVE ALL BURRS AND SHARP EDGES
DO NOT SCALE
IF IN DOUBT – ASK

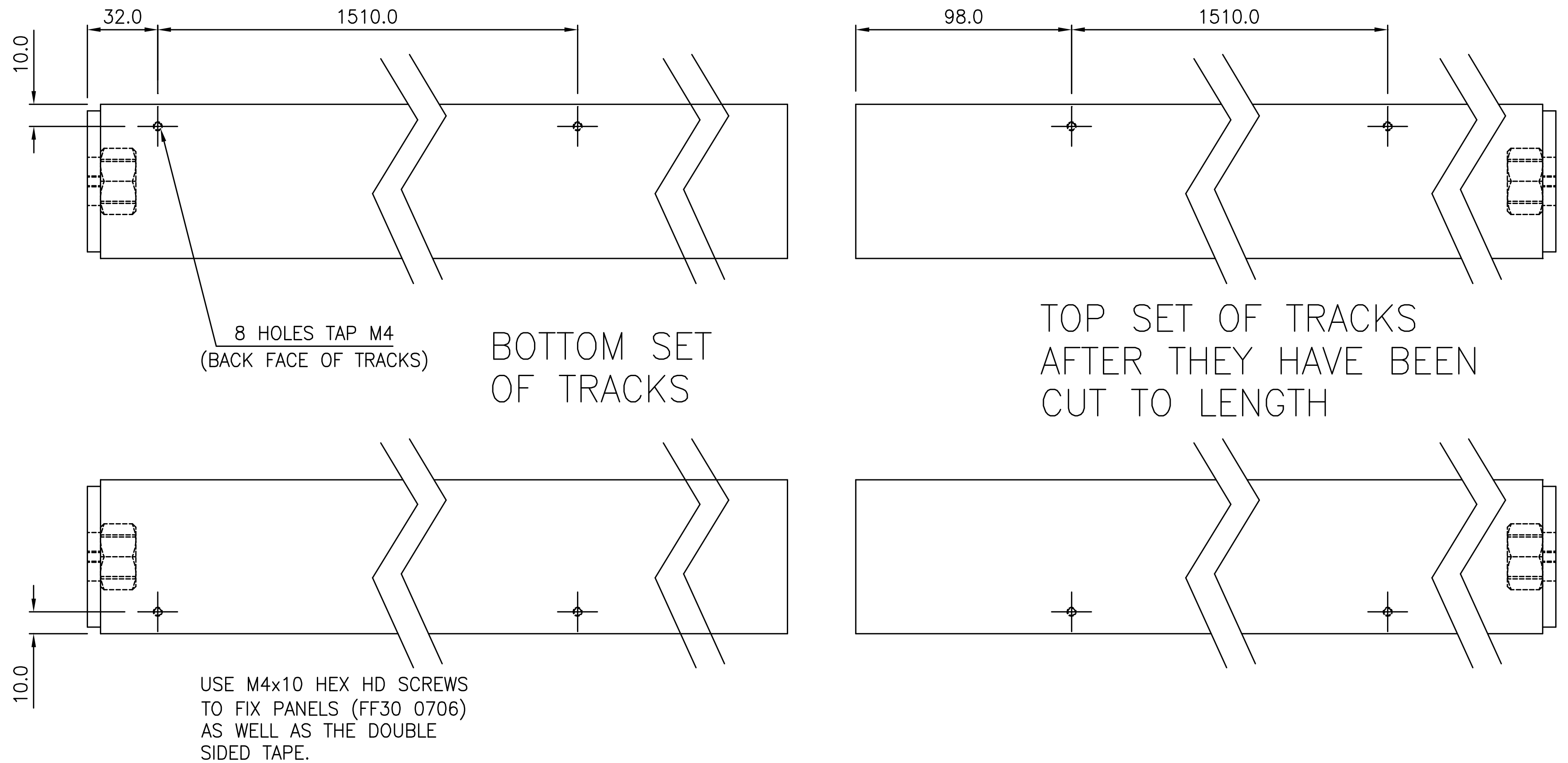

ISS	ALTERATION	INTLS & DATE
A	PRODUCTION ISSUE ECO 0791	WP 14.12.00

Wessex ©
WESSEX MEDICAL EQUIP. CO. LTD
BUDDS LANE , ROMSEY,
HAMPSHIRE. SO51 0HA

THIS DRAWING IS THE PROPERTY OF WESSEX MEDICAL EQUIP. CO. LTD. AND MAY NOT BE PUBLISHED, REPRODUCED OR USED FOR MANUFACTURE WITHOUT THE EXPRESS PERMISSION OF THE OWNERS IN WRITING

SCALE 1:2 @ A3

DRN WP	DATE 5.12.00
CHKD	DATE
APPD	DATE

ALL DIMENSIONS IN mm UNLESS OTHERWISE STATED AND DRAWN TO BS 308

TOLERANCES: UNLESS OTHERWISE STATED			ANGULAR ±0.5°
X	X.X	X.XX	THREAD ISO COARSE CLASS 6
±1.0	±0.25	±0.13	

MATERIAL: N/A
B.STANDARDS: N/A
FINISH: N/A

DESCRIPTION
FALSE WALL FIXING DETAILS

DRAWING No.
VM00 2150

SHEET 1 OF 1 SHTS

SECTION 6

Hydraulics

Hydraulic Section Contents

Product: VM Service Procedure
Document Ref: VM00 5670
Description: Hydraulic Section Contents

Compiled by: K.Farthing
Issue: 2
Date: 08 March 2007

Return to contents

1. Hydraulic Ram Change Procedure

2. Hydraulic Ram Bleed Procedure

3. Hydraulic Circuit Drawing

Wessex Lift Co Ltd, Budds Lane, Romsey, Hampshire, SO51 0HA

Hydraulic Ram Change Procedure

Product: VM Service Manual
Document Ref: VM00 5680
Description: Ram Change Procedure

Compiled by: K.Farthing
Issue: 2
Date: 08 March 2007

Return to contents

RAM CHANGE PROCEDURE

REFER TO THE INSTALLATION / SERVICE REFERENCE FOLDER FOR SPECIFIC SETTING INSTRUCTIONS.

The following documents should be available and referred to whilst changing the ram;
Top and Bottom Carriage Sliders Setting Instruction VM00 2030
Ram Housing Setting Instruction VM00 2020
Bleed Procedure for Lift

Specialist Tools Required
2 off bleed pipes
2 off plastic tubes (rollers) approx. 100mm dia, wall thickness 3mm + to move lift.
Absorbent cloths in case of fluid spillage.

Warning Be aware that trapping / shearing / lifting hazards will be prevalent during moving of the lift car and ram when partially dismantled. Also, familiarise yourself with our documents “Safety Whilst Working On The Lift” and “Safety And Hydraulic Systems”. It is recommended that ram changes be carried out by at least 2 persons, one of whom is a competent Lift Engineer.

1.1 Remove rear panels of the lift.
1.2 Remove the extensions fitted to the rear LH and RH of the floating platform.

2.1 Remove the 2 off M5 screws that secure the left-hand side of the ram-housing upper to the structural beam. Slacken (but do not remove) the 1 off M5 screw holding the right-hand side of the ram hosing upper to the structural beam.
2.2 Gently lower the ram-housing upper to the ground.
2.3 Remove the bottom limit switch cam from the inside face of the lower end of the LH track, it is advised to mark its position first.

With the lift raised approx. 300mm above the ground floor.
3.1 Pull floating platform down from the lift car.
3.2 Apply a small g-clamp (or similar) to each platform rope close to where the rope exits beneath the lift side frames (this will prevent the ropes retracting into the lift car).
3.3 Detach the floating platform from the lift by carefully cutting the cable ties from around each rope end ferrule and disconnecting the wire rope from its retainer in the platform.
3.4 Place the 2 off roller tubes width ways beneath the lift, one approx. 100mm from the front of the lift and one approx. 100mm from the rear of the lift.
3.5 Cautiously lower the lift onto the tubes.

With the lift fully supported on the tubes.
4.1 Slacken the M8 HEX. HD. Screws holding the slider stabiliser rear (VM30 0244, see drawing VM00 2030 sheet 2) and move the sliders inboard.
4.2 Remove the M8 HEX. HD. Screws holding the top slider brackets (VM30 0247, see drawing VM00 2030 sheet 1) and remove the brackets.
4.3 Remove the M6 screws and spacer holding the ram cover slide to the front of the ram. Lower the cover down.
4.4 Remove the M10 socket cap screw securing the ram head to the carriage, taking care not to lose the ram head swivel.
4.5 Lower the ram clear from the carriage by using the emergency lower valve.

Wessex Lift Co Ltd, Budds Lane, Romsey, Hampshire, SO51 0HA

4.6 Gently roll the lift car clear of the tracks; ensure that the trailing cable is not stretched, if necessary disconnect this from the lift car.
4.7 Slacken and then remove the ram height adjusters (remove 8 off M8 locknuts first) that hold the ram housing to the structural beam.
4.8 Remove the 8 off M8 x 16 HEX. HD screws (4 each side) from the sides of the ram housing.
4.9 Lower the ram housing fully and ensure that there is no hydraulic pressure left in the system.
5.0 Be prepared to contain any fluid spillage.
5.1 Disconnect the hydraulic supply hose from the base of he ram.
5.2 Remove the ram and ram housing to a clear area.
5.3 Remove and set aside, for re-use, the fittings from the base of the ram.
5.4 Fit a blanking plug to the base of the ram to prevent leakage during transportation.
5.5 Remove the ram from the housing.

Refitting of the replacement ram

Refitting is the reverse of the removal sequence; however, the following should be noted;

- Use new Dowty Seals as a matter of routine.
- Bleed the ram before fitting the upper ram housing.
- Top up the fluid reservoir on completion.
- The ram can be extended to meet the carriage by careful use of the contactor within the PSU box.
- Refit the ram and housing by making specific reference to the ram-housing setting instruction (VM00 2020).
- It is imperative that the M10 socket cap screw securing the ram head to the carriage is refitted correctly.
- Refit the lift to the tracks with particular reference to the top and bottom carriage sliders setting instruction (VM00 2030).
- When refitting the floating platform use new cable ties around the rope ferrules.
- Ensure that the bottom limit switch cam is refitted and that the limit switches operate correctly, refer to setting instruction VM00 2100.

On completion check that all the lift safety circuits function correctly and that the lift is running smoothly.

Hydraulic Ram Bleed Procedure

REFER TO THE INSTALLATION / SERVICE REFERENCE FOLDER FOR SPECIFIC SETTING INSTRUCTIONS.

WARNING The utmost care must be taken as the lift will be moved with the rear panels removed and trapping / shearing hazards will be exposed.

The bleeding of the ram should be carried out with the car stopped at the lowest level. Prior to bleeding it is necessary to lower the ram-housing upper to expose the bleed nipples.

1.0 Remove the rear panels of the lift.

2.0 When the lift car and trap board are partially raised remove the 2 off M5 screws that secure the left-hand side of the ram-housing upper to the structural beam. Slacken (but do not remove) the 1 off M5 screw holding the right hand side of the ram housing upper to the structural beam.

3.0 Gently lower the ram- housing upper to the ground.

4.0 Cautiously lower the lift car to the ground.

5.0 From inside the car remove both bleed nipple dust caps.

6.0 Connect bleed hoses to both bleed nipples and secure using clips provided.

7.0 Immerse the other end of the bleed hoses in clean hydraulic fluid in a jar.

8.0 Start the pump. Raise the lift approx. 50mm. Fluid will pass through at low pressure into the jar and the car will lower. Watch for air bubbling in the jar.

9.0 Repeat the above until fluid clear of air passes into the jar.

10.0 Remove the bleed hoses and refit the nipple caps.

11.0 Refill the fluid reservoir.

12.0 Raise the lift approx. 200mm and ensure lift is not creeping down.

13.0 Refit the ram-housing upper to the structural beam.

14.0 Refit the rear panels to the lift.

THIRD ANGLE PROJECTION	REMOVE ALL BURRS AND SHARP EDGES DO NOT SCALE IF IN DOUBT – ASK

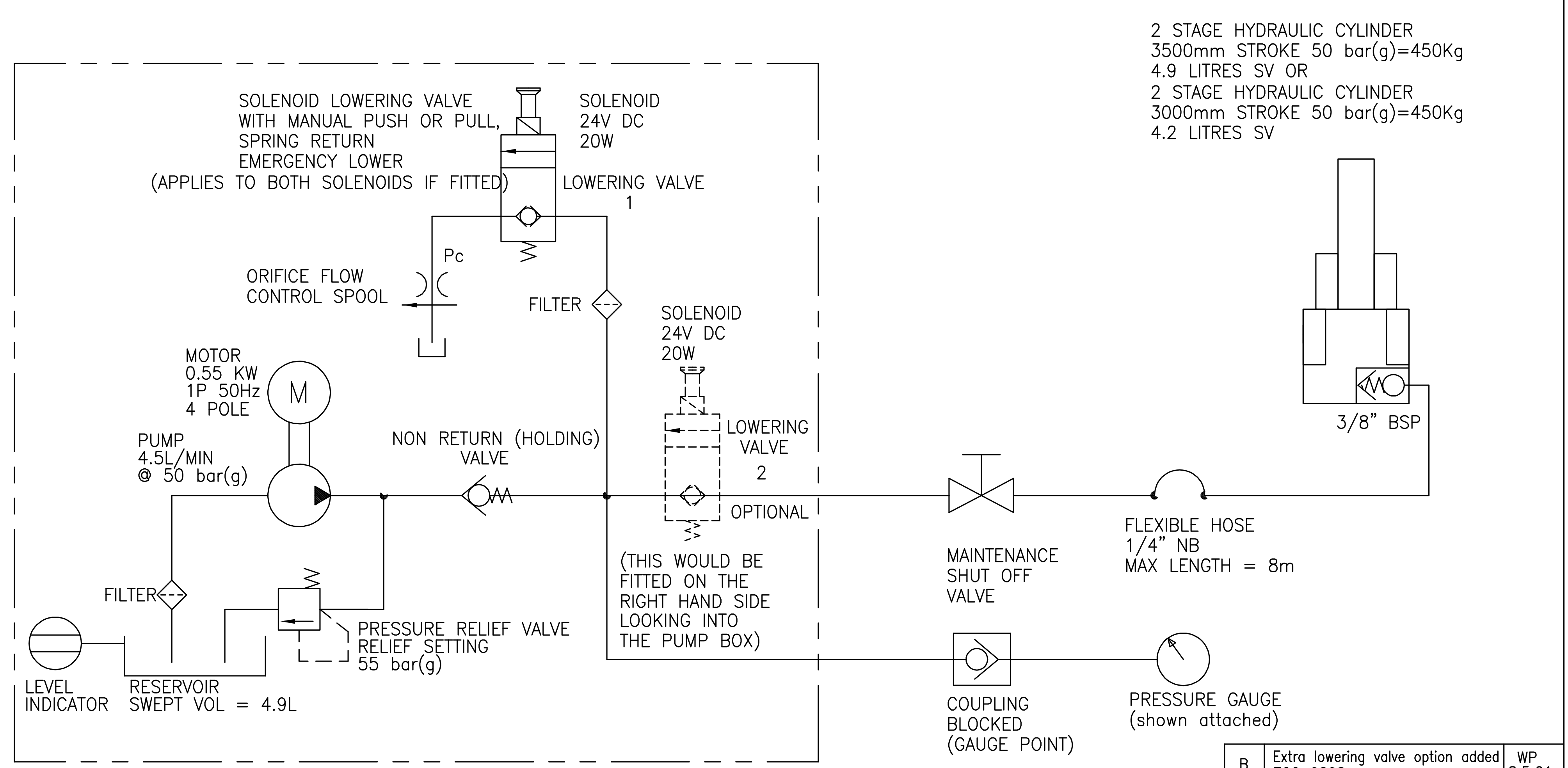

ISS	ALTERATION	INTLS & DATE
B	Extra lowering valve option added ECO 0808	WP 8.5.01
A	PRODUCTION ISSUE ECO 0576	MH 7.8.96

Wessex ©
WESSEX MEDICAL EQUIP. CO. LTD
BUDDS LANE , ROMSEY,
HAMPSHIRE. S051 0HA

THIS DRAWING IS THE PROPERTY OF WESSEX MEDICAL EQUIP. CO. LTD. AND MAY NOT BE PUBLISHED, REPRODUCED OR USED FOR MANUFACTURE WITHOUT THE EXPRESS PERMISSION OF THE OWNERS IN WRITING

SCALE	NTS
DRN M HUNT	DATE 7.8.96
CHKD	DATE
APPD	DATE

ALL DIMENSIONS IN mm UNLESS OTHERWISE STATED AND DRAWN TO BS 308

TOLERANCES: UNLESS OTHERWISE STATED			ANGULAR ±0.5°
X	X.X	X.XX	THREAD ISO COARSE CLASS 6
±1.0	±0.25	±0.13	

MATERIAL
B.S. SPEC:
FINISH:

DESCRIPTION
HYDRAULIC CIRCUIT
MK2 VERTICAL LIFT

DRAWING No.
VM30 8003
SHEET 1 OF 1 SHTS

SECTION 7

Lubrication Schedule

Item to be lubricated➔ Time of application🡻	TRAP BOARD PICK UP MECHANISM	GAS STRUT	SIDE SAFETY EDGE	DOOR SAFETY EDGE	REAR SAFETY EDGE	POWER DOOR GUIDE CHANNEL ASSEMBLY
PRODUCTION	Apply grease to the plunger, tube and faces of the trap board socket	Grease plunger beneath spring, also guide welded to side panel	Refer to Drawing No. VM00 2050	Refer to Drawing No. VM00 2060	Refer to Drawing No. VM00 2070	Apply grease to Guide channel. Refer to Drawing No. VM00 2130
INSTALLATION						
SERVICE	Clean and reapply if necessary	Clean and reapply if necessary	Clean and reapply if necessary	Clean and reapply if necessary	Clean and reapply if necessary	Clean and reapply if necessary

SUGGESTED LUBRICANTS

SPRAY LUBRICANT	Ambersil 40+ (CM31 1000), WD40, Loctite Repel or similar
GREASE	Lithium Grease EP2, Castrol LM Grease or equivalent
HYDRAULIC OIL	ISO 32 Hydraulic oil (MM31 5001)

Return to contents

Item to be lubricated➔ Time of application🡻	**FLOOR: ROLLER ASSEMBLY**	**DOOR HINGES**	**DOOR LINK ARM**	**DOOR LATCH & KEY MECHANISM (VM10 0681 & VM 0606)**	**RAM**	**DOOR FLAP**
PRODUCTION	Apply light coat of grease to pin before assembly	Apply Grease to hinge pivot point				Grease hinges
INSTALLATION			Apply grease to pivot rod before inserting into bracket on side panel	Apply thin film of grease to mechanism and ensure burr free.	Apply hydraulic oil to cylinder if required (dependent on supplier of ram)	
SERVICE	Clean and reapply if necessary		Clean and reapply if necessary	Clean and check for signs of burring remove if necessary, re-apply thin film of grease. (Report burring problem if present to engineering)		Clean and reapply if necessary

<u>SUGGESTED LUBRICANTS</u>

SPRAY LUBRICANT	Ambersil 40+ (CM31 1000), WD40, Loctite Repel or similar
GREASE	Lithium Grease EP2, Castrol LM Grease or equivalent
HYDRAULIC OIL	ISO 32 Hydraulic oil (MM31 5001)

SECTION 8

Replacement Parts

Return to contents

PART NUMBER	DESCRIPTION
	MAIN PCB (See specific PCB for part number)
EC08 1502	SWITCH MICRO BVMFYR
EC06 2010	INCANDESCENT BULB **(Pre 7000 serial number)**
EC07 0006	FUSE 3.15A A/S LBC 20MM GLASS
EC07 0007	FUSE 5A A/S LBC 20MM GLASS
EC07 0017	FUSE 10A S/D LBC 20MM GLASS
EC07 0020	FUSE 10A HBC CERAMIC
EC08 1501	SWITCH MICRO BVM3FYR1
EC08 1504	SWITCH 2VCFQR1**(Pre 7000 serial number)**
EC08 1517	SWITCH MICRO VCFQ2
EC08 1518	SWITCH LIMIT XG2-S20
EC08 3003	SWITCH LIMIT BVM3FQ1
EC08 3028	SWITCH FINAL LIMIT KB5 EQ
EC08 3029	SWITCH VCFQR1 **(Pre 7000 serial number)**
EC08 4500	REED SWITCH DOOR CLOSE LIMIT
EC08 4501	MAGNET REED SWITCH DOOR CLOSE LIMIT
EC08 4502	REED SWITCH TRAP ASSEMBLEY
EC08 4503	MAGNET REED SWITCH TRAP ASSEMBLEY
EC12 0014	BULB 24V 10W **(Pre 7000 serial number)**
HC20 0200	DOWTY WASHER ¼ BSP
HC20 0300	DOWTY WASHER ⅜ BSP
HC23 0200	BANJO BOLT
HC23 0202	BANJO SWAGE FITTING
HC23 0203	ADAPTER ¼ BSP TO ⅜ BSP MALE
HC23 0204	ADAPTER 90° ELBOW
HC44 0200	ADAPTER ¼ BSP FEMALE
HC53 8002	BLEED NIPPLE
MC10 8022	SAVORY PUMP A/V MOUNT PART 1
MC10 8023	SAVORY PUMP A/V MOUNT PART 2
MM21 2000	RUBBER DOOR BUFFER SELF ADHESIVE
EC04 2011	SOLENOID SHOOT BOLT
EC04 2007	SOLENOID DOOR LATCH
HC00 1010	HYDRAULIC RAM. TRAVEL UP TO 3 METRES
HC00 1012	HYDRAULIC RAM. TRAVEL UP TO 3.5 METRES
MM31 0014	VELCRO PANEL PADS. SELF ADHESIVE
MM35 0031	GAS STRUT
PT04 0004	DOOR ACTUATOR
EC08 4504	REED SWITCH DOOR OPEN LIMIT**(Serial number 7000 onwards)**

PART NUMBER	DESCRIPTION
EC08 3037	SWITCH LIMIT/ANTI-CREEP/OVERTRAVEL **(Serial number 7000 onwards)**
EC103031	GROMET WHITE DOOR SAFETY EDGE AND LOWER CABLE COVER
EC12 0018	HALOGEN LAMP 24v 20w**(Serial number 7000 onwards)**
VMOP 1092	IN-CAR KEY SWITCH
MC04 1035	SPRING COMPRESSION. FLOATING PLATFORM VM30/50 ALSO ALL TRAPS
MC04 1050	SPRING COMPRESSION. FLOATING PLATFORM VM31/51/36/56
EC14 3005	BATTERY 12V 1.2AH**(Serial number 7000 onwards)**
MM35 0031	GAS STRUT
VM30 8046	LOOM TRAILING CABLE VM30 RANGE**(Serial number 7000 onwards)**
VM50 8004	LOOM TRAILING CABLE VM50 RANGE **(Serial number 7000 onwards)**
EC14 5006	TELEPHONE

SECTION 9

Troubleshooting

Troubleshooting

Product: VM Service Documents **Compiled by: K.Farthing**
Document Ref: VM00 5710 **Issue Number: 2**
Description: Troubleshooting **Date: 08 March 2007**

Using the LED indicators on the circuit board it is usually possible to trace a fault down to a circuit quite quickly.The Descriptions below are intended as a guide only and should be used in conjunction with the relevant circuit and schematic diagrams.

First Checks

If the stop and door interlock LED's are illuminated the lift should be ready to travel.***See Fig 1***

Use the table below to establish the LED status and fault indications if the lift will not run.The photographs below show the LED's and their normal running condition.

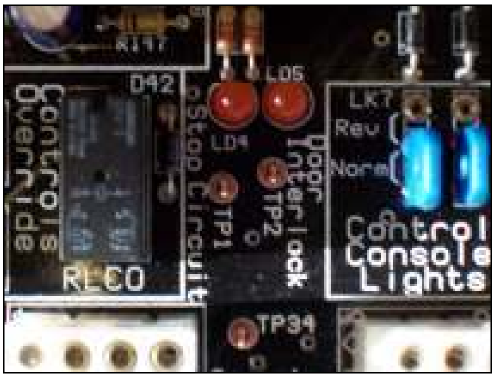

Fig 1

Stop and Door Interlock LED's are normally lit

Fig 2

Door interlock fail LED should not be lit

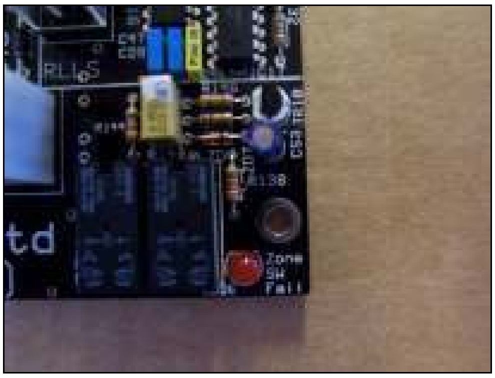

Fig 3

Zone switch fail LED should not be lit

LED STATUS	DESCRIPTION	POSSIBLE CAUSE
LD4 Not lit	Stop Circuit ***Fig 1***	Check key switches and locking stop buttons.
LD5 Not lit	Door Interlock ***Fig 1***	Check the door latch interlock switch and the magnetic reed switch.
LD25 Lit	Door Interlock Fail ***Fig 2***	Ensure the door latch is not stuck up.Check that the door interlock switch is functioning correctly. Check that the user is not pushing down on the door safety edge as they are closing the door.
LD26 lit	Zone SW Fail ***Fig 3***	Check that the lower floor limit is not stuck in.Check that the lower floor limit is not off the stop plate with the zone switch still engaged.

Lift Will Not Descend

If the lift will not descend after the above checks have been carried out the fault may be in one of the control surfaces on the lift. When the down button is pushed all 3 LED’s shown in fig 4 should illuminate.If the lift will not travel push and hold the down button whilst observing the LED’s.Use the table below to determine the possible cause if any of the LED’s are not illuminated. LD 8,when lit, indicates that the down button is being pushed.

Fig 4

All 3 LED’s should illuminate when down button pushed

LED STATUS	DESCRIPTION	POSSIBLE CAUSE
LD12 not lit LD13 not lit	Floating Platform Trap Assembly	Check the floating platform down safety switches and the wiring from the switches to the Circuit Board.All switches should be normally closed.
LD 13 not lit	Trap Assembly	Check the trap down safety switches and the wiring from the switches to the circuit board. All switches should be normally closed.

Lift Will Not Ascend

If the lift will not ascend after the checks on the previous page have been carried out the fault may be in one of the control surfaces on the lift. When the up button is pushed all 4 LED's shown in fig 5 should illuminate. If the lift will not travel push and hold the up button whilst observing the LED's.Use the table below to determine the possible cause if any of the LED's are not illuminated. LD7,when lit, indicates that the up button is being pushed.

Fig 5
All 4LED's should illuminate when up button pushed

LED STATUS	DESCRIPTION	POSSIBLE CAUSE
LD 9 not lit LD10 not lit LD11 not lit	Floating Platform Car Safety Edges Trap Assembly	Check the floating platform up safety switches and the wiring from the switches to the Circuit Board. All switches should be normally closed.
LD10 not lit LD11 not lit	Car Safety Edges Trap Assembly	Check the lift car safety edge switches and all wiring back to the Circuit Board. All switches should be normally closed.
LD 11 not lit	Trap Assembly	Check the trap up safety switches and the wiring from the switches to the circuit board. All switches should be normally closed.

SECTION 10

AMENDMENT RECORD

Document Amendment Record

Product: VM Range
Document Ref: VM00 5720
Description: Amendment Record

Compiled by: K.Farthing
Issue: 2
Date: 08 March 2007

Return to contents

Date	Amendment Details	Reference Number